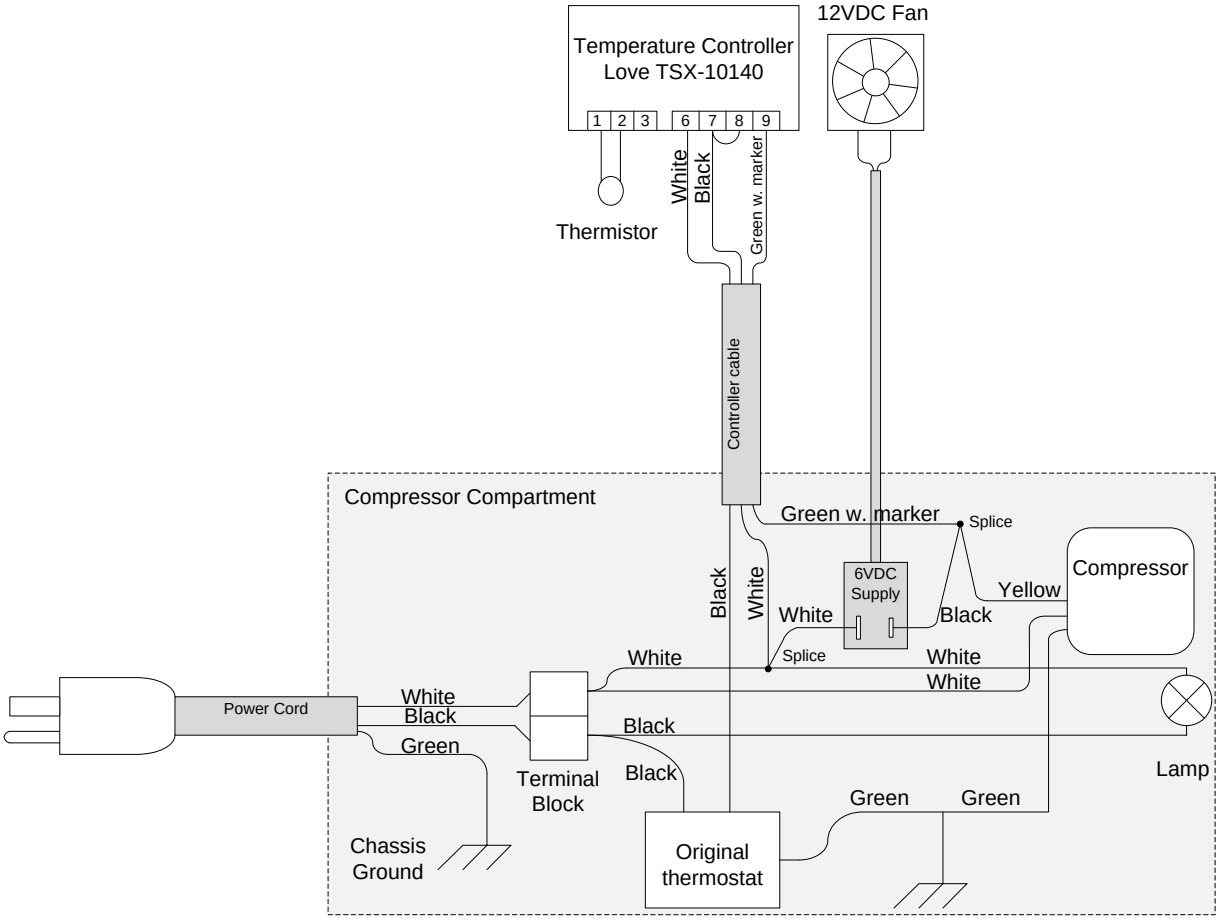
Temperature Controller
Love TSX-10140
1
2
3
6
7
8
9
12VDC Fan
Thermistor
White
Black
Green w. marker
Controller cable
Compressor Compartment
Green w. marker
Splice
Compressor
6VDC
Supply
Yellow
Black
White
Black
White
Splice
White
White
White
White
Power Cord
White
Black
Green
Black
Black
Terminal
Block
Lamp
Green
Green
Chassis
Ground
Original
thermostat